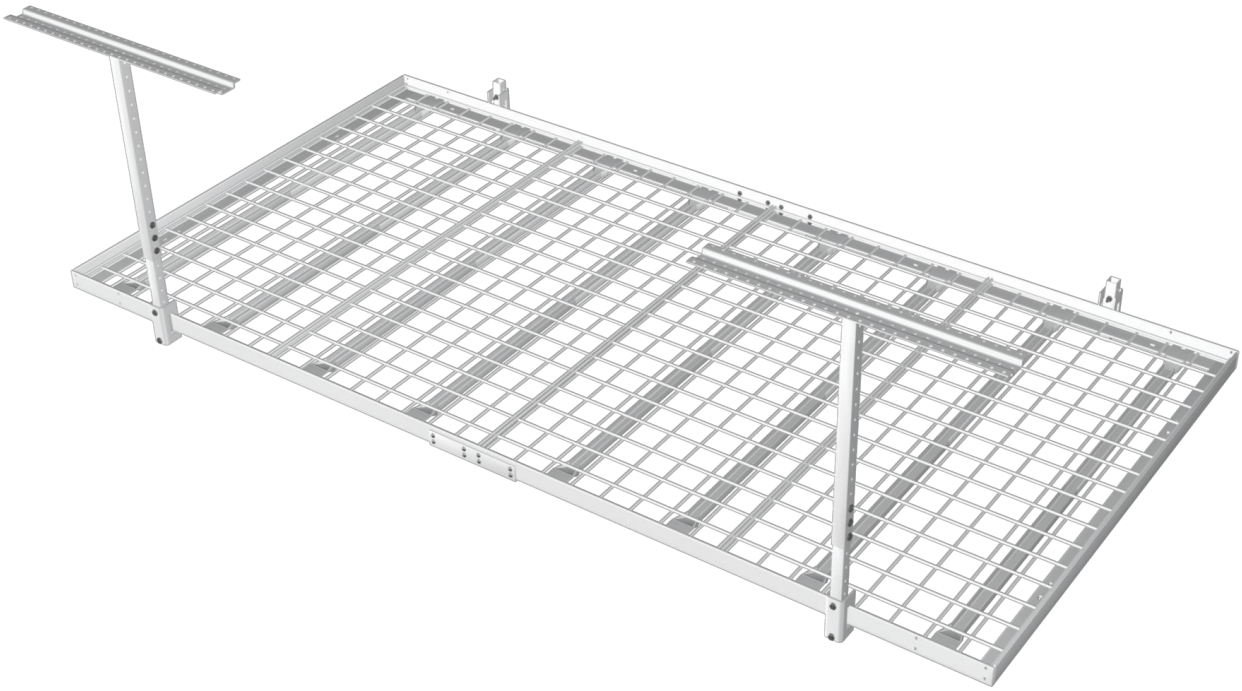

48 in. X 96 in.

1000 Pound Capacity Overhead/Wall Storage Unit

MODEL # SR1000

US Patent 8,511,486, Patent Pending

Table of Contents

Installation Support

Please Do Not Return This Product To The Store!

1-877-717-RACK (7225)

info@strongracks.com

If there are any missing or damaged parts, please contact us immediately for replacement. In some cases, a new part can be shipped to you within 1-3 days.

Our quality control members hand check every box prior to shipment. We take this very seriously and want you completely satisfied.

If you find that installation of our products might be a little more technical than you anticipated, then we can simply guide you to a qualified installer and arrange for the installation. Our vast installation support network allows us to offer you the extra support you might need with busy schedules.

Please review our list of dealers at www.strongracks.com or contact us for help. Refer to Appendix IV for additional installation help.

Safety Information

STOP: Ensure that you understand your ceiling support structure prior to installing.

Ensure that you know your load prior to loading items on your ceiling storage system.

Our products are designed for installation into properly constructed wood ceiling joists, TGI's or floor joists. *Do not install into metal studs or ceiling concrete floors.* We do not warranty or make any claim to the construction of your home. If you have any questions about your homes construction, check with your local builder. If you are not comfortable with installing this product, call one of our authorized dealers for support.

Do not exceed the posted weight capacity of our units. We suggest that you weigh each item prior to loading. The weight capacities are based upon even distribution. Even distribution is the average of the total capacity, divided by the size of the unit. For example, a 600 LB capacity 4'x8' unit will have a per square foot weight capacity of 18.75 pounds. Do not exceed the posted capacity.

Safety Information

You must read this entire manual before attempting to install this product. We also suggest you visit ***www.strongracks.com*** to review our installation video. If you have any additional questions or need to speak with an installation professional, do not hesitate to call us directly. We will provide timely responses to your questions.

1-877-717-RACK (7225) Monday - Friday 9am-5pm Arizona Time

We have hundreds of qualified dealers throughout North America. Visit ***www.strongracks.com*** to contact your local installer.

Warning

Electrical , Plumbing or Gas Lines May Be In The Ceiling or Walls

Prior to drilling, you must identify where your electrical, plumbing and gas lines are inside your walls or ceilings. Failure to do so may result in damage or serious injury. Contact a professional to locate.

Warning

Be Aware of Falling Items or Personal Fall Hazard

Be aware when climbing a ladder. Do not have your hands full when climbing. Do not lean out away from the ladder to load or install the system. Do not overreach or overextend from ladder.

Warning

Ceiling Joist, Truss and Wall Stud Overloading Potential

This system can be installed into 2 or 4 Ceiling Joists. We recommend that you install into 4. You can also install the system into the wall studs. If you install into 2 joists, do not install another unit into the same joists. Weigh all items prior to loading. 600 Pound Max.

Warning

System May Be A Personal Injury Hazard

Failure to read and follow these installation instructions, per the manufacturer's guidelines, may result in serious injury or death. If you are uncomfortable installing yourself, please contact us or visit our website to identify an installer of our products.

Required Tools

Optional Tools

We recommend that you use the Storage Locator Worksheet (Appendix II), to note where you would like to install our products. You can also draw out the position / direction of your ceiling trusses, as it relates to our systems. Keeping good notes will ensure proper installation and support future installations.

Hardware Kit Contents

Note: Extra hardware may be included in kit.

Letter and Name	Picture	Quantity
Large Carriage Bolt	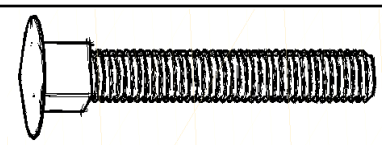	x12
Small Nut		x36
Small Bolt	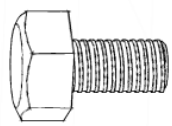	x20
Small Carriage Bolt	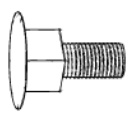	x24
Medium Bolt	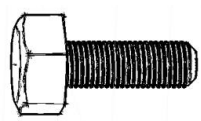	x12
Large Bolt		x8
Large Nut	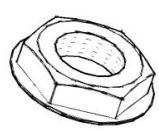	x32
Rail Clamp	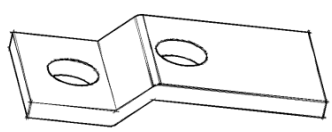	x8
3” Lag Screw	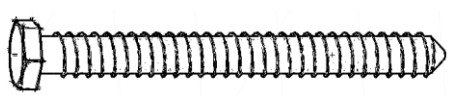	x8
4” Lag Screw	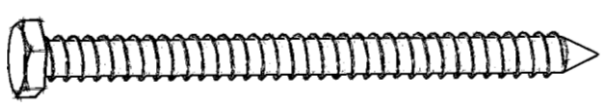	x4

Part List

Part # and Name	Picture	Quantity
Mounting Track		x2
Down Tube	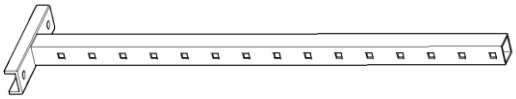	x2
Inner Tube	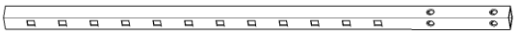	x2
Rail Bracket	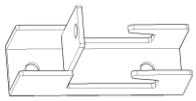	x2
Rail Bracket w/Mini Tube	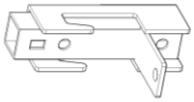	x2
Rail		x6
Universal Rail Connector	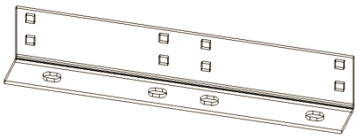	x2
2’ x 4’ Grids	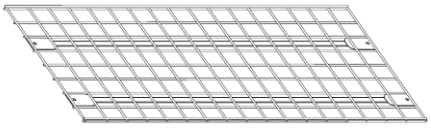	x4

1

Determine your ceiling support system. To understand your truss direction, spacing or placement, you may need to enter your attic. You may also need to consult your builder or a licensed contractor. As an additional resource, refer to Appendix I. **Tip**: The direction of your ceiling outlets will indicate the direction of your trusses, just as the location of your garage door support will indicate the location and spacing of your trusses.

2

Determine what section of the garage will house your new Strong Rack. Make sure there are no obstructions within the designated space (i.e., lights, attic door, sprinklers, etc.). If you have cabinets in your garage, make sure there is adequate clearance for doors to open. The image below represents our rack outline. The arrows represent where the (2) Down Tube locations will be.

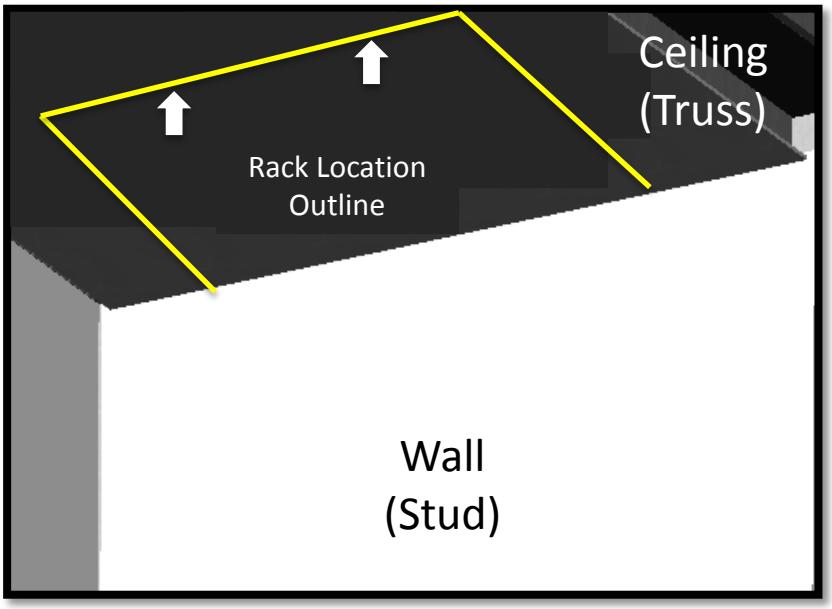

3

Measurements and installation procedures are provided on the following page. Please note that the provided measurements are for the center of the mounting track (dashed line in the figure below).

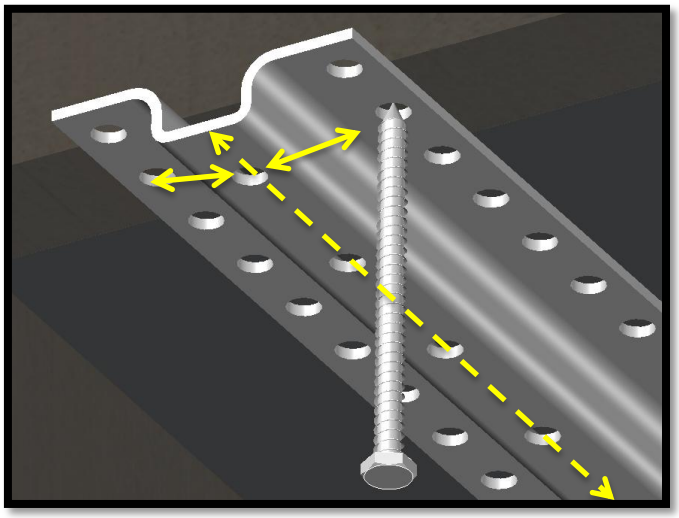

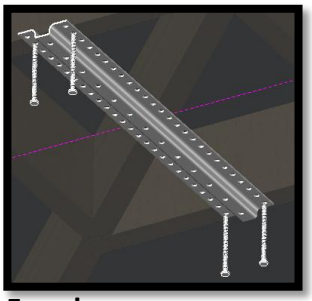

Four lag screws secure each mounting track into two trusses

From the center of the mounting track measure 1 ¼” in each direction to pinpoint the appropriate drilling locations (shown above in the solid lined arrows).

Hardware Required:

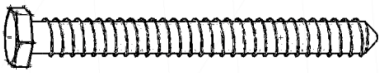

x8

3 Continued

Begin with the ceiling: measurements should be: 21 ½ inches from each corner down the 8 foot length, giving you the center of the Down Tube location. From there 53 inches to the next tube location. 49 ½" from the wall to center across the 4 foot width. (**3' depth is 37 1/2 " across and 2' depth is 25 1/2" across)**

These markings will indicate where each of the Down Tubes will be placed. Locate the two trusses most near to these markings. Each marking will denote the center of the mounting track. The lag screws will be 1 ¼" to each side of the center mark. It will be necessary to drill a pilot hole before using the lag screws. Use lag screws to affix each Mounting Track to the two closest trusses. Replicate this step for both Mounting Tracks.

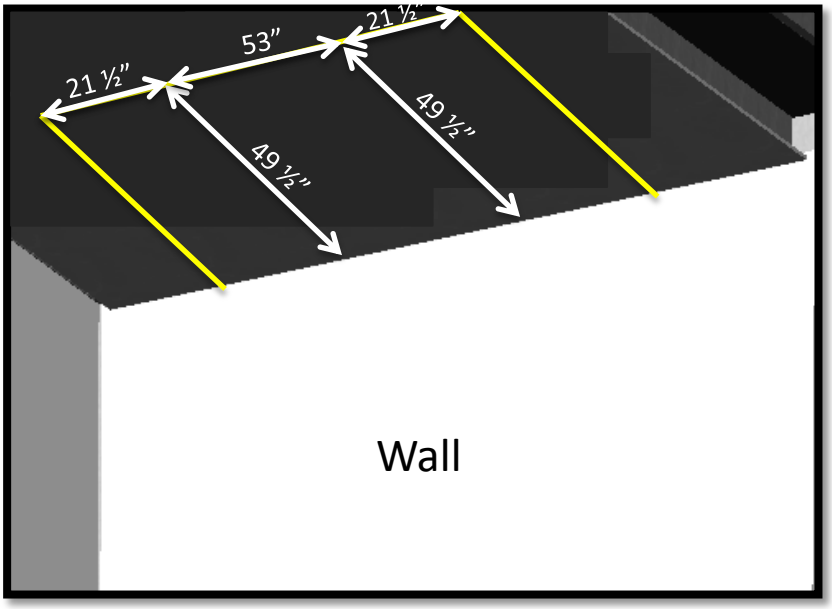

Ensure the lag screw is in the center of the truss. Refer to Appendix III for additional information regarding proper mounting.

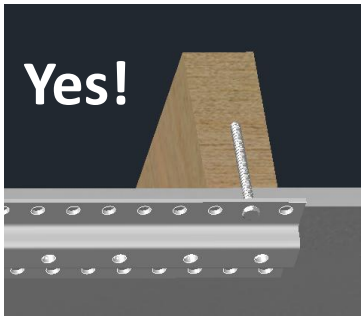

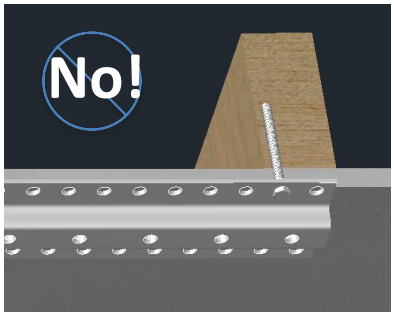

Hardware Required:

x4

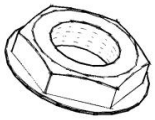

x4

4

Hand tighten only!

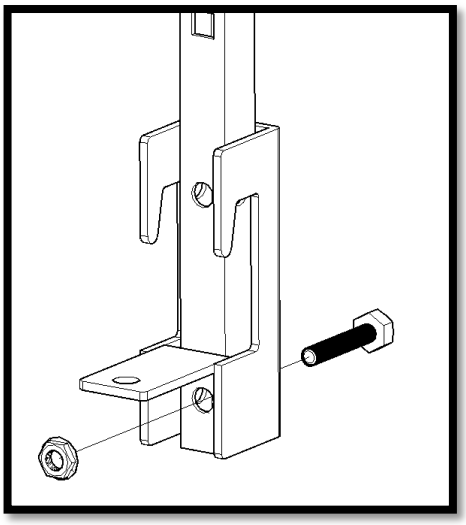

Slide Rail Bracket onto Inner Tube and use Long Bolt with Large nut to secure.

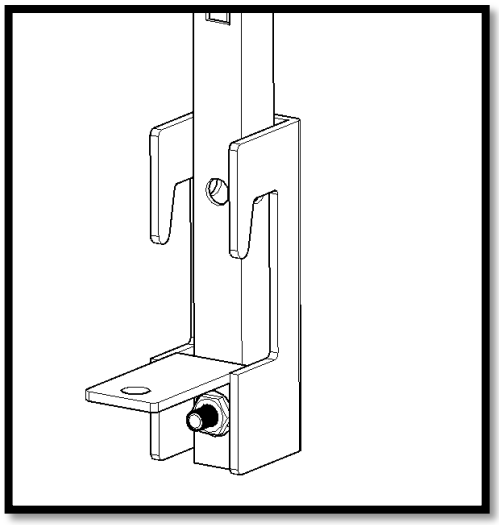

Secure lower hole only!

Repeat for both brackets.

Note: The rail brackets can be turned 90 degrees determined by your mounting track direction in relationship to the rack.

Hardware Required:

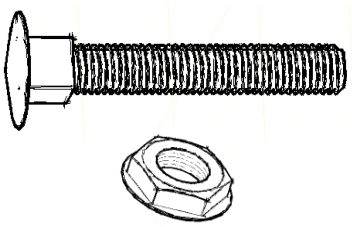

x12
x12

5

Insert Inner Tube into the Down Tube. Slide the Inner Tube up or down to determine the desired height of the Strong Rack. You may want to consider the size of your vehicle, your height, steps, ground storage, etc. Use three Large Carriage Bolts and three Small Nuts to secure the tubes together. The flat head of the bolts should face outward. Replicate this step for all four tubes ensuring that they are all the same height. **Tip**: Count the exposed holes on the Inner Tube to ensure level installation.

Do not over tighten.

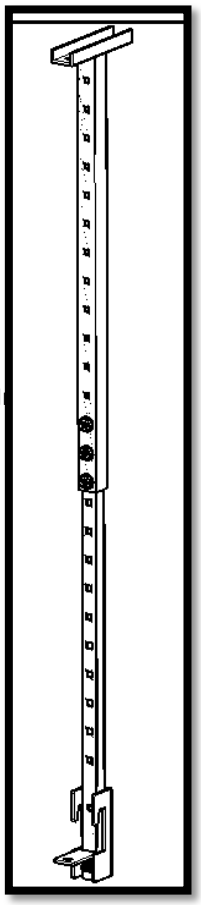

(Fully Extended)

Adjust preferred height:

Secure Down Tube and Inner Tube together using three Large Carriage Bolts.

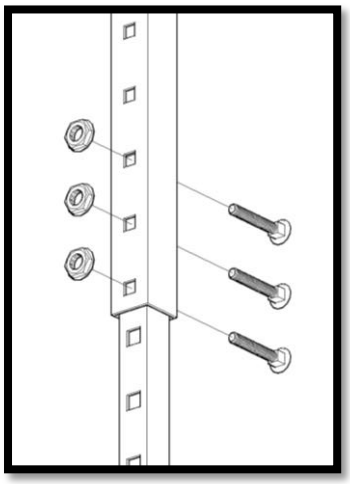

The bolts must be used in the bottom three holes of the Down Tube.

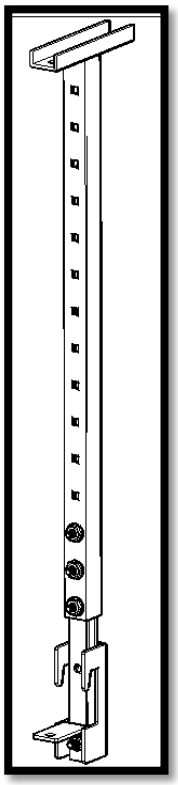

(Fully Retracted)

Hardware Required:

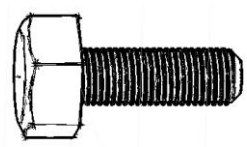

x8

6

Using Medium Bolts, attach your Down Tube to Mounting Track. The Down Tube should be centered over your marking from the measurements utilized in step 3. Replicate this step for both Down Tubes.

Please note: Although the Down Tube must be centered on your marking, it may not be centered on the Mounting Track.

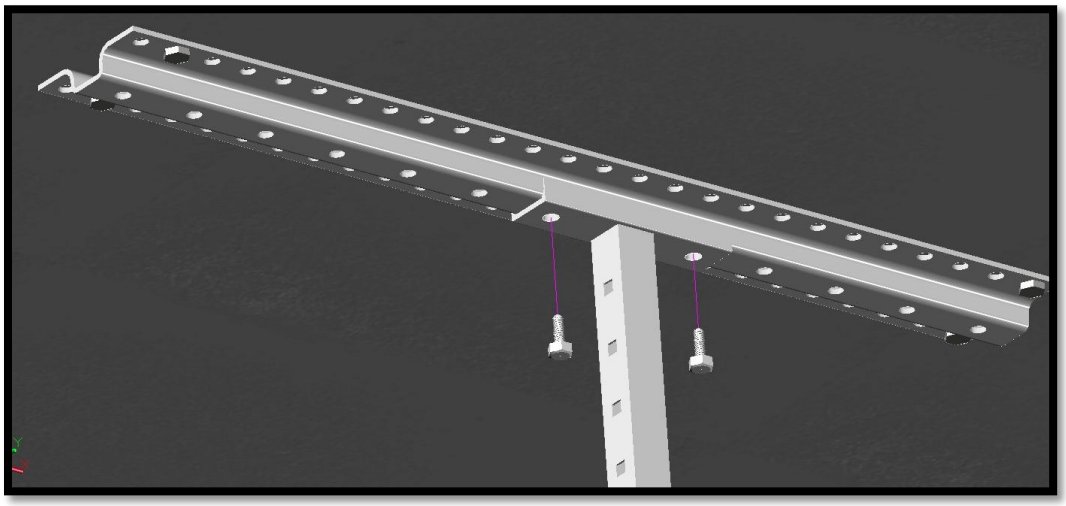

Hardware Required:

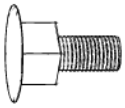

x24

x24

7

To assemble the sides of the platform, begin by laying two 4’ Rails end to end. Use Universal Rail Connector, along with twelve Small Carriage Bolts and twelve Small Nuts, to join the two 4’ Rails. Repeat with other two 4’ Rails and second Universal Rail Connector.

Note: Bolts on the bottom should have heads facing up (this will allow the grids to sit flat).

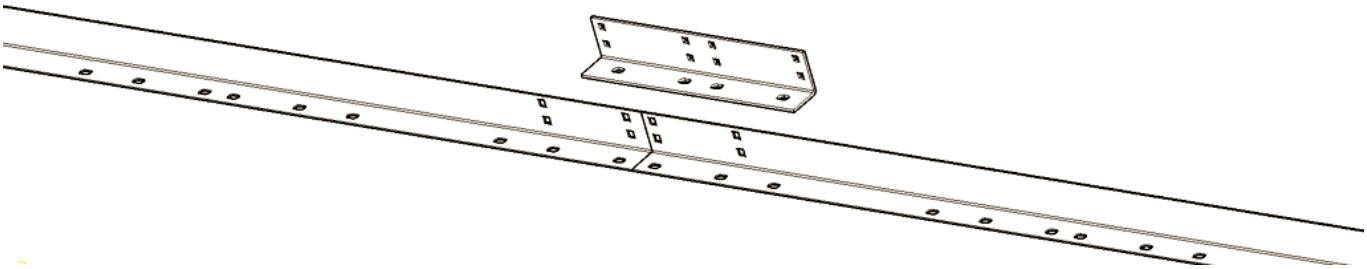

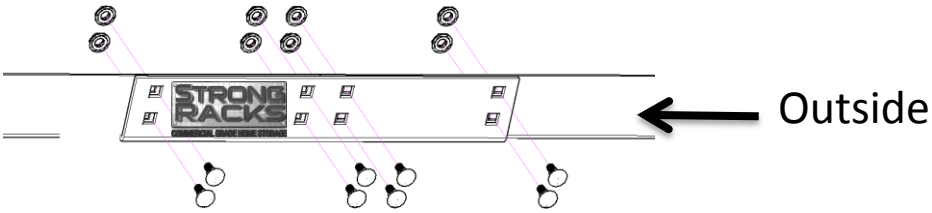

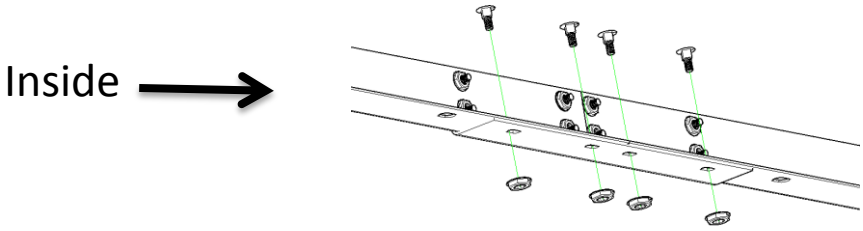

Completely Tighten both sets to creating the two 8’ lengths.

Hardware Required:

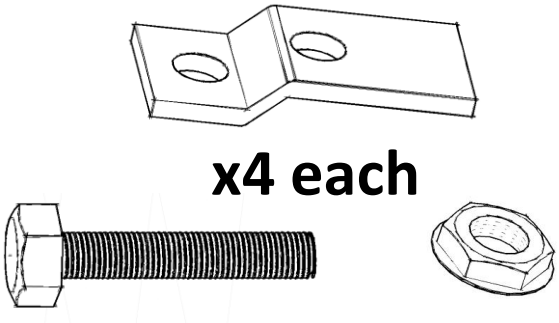

8

Lay one 8’ section in the rail brackets supported by the two Inner Tubes with the Universal Rail Connector in the center. Measure the distance from the wall to each 8’ section to ensure proper alignment of the two. Once aligned, use one Rail Clamp, one Large Bolt and one Large Nut to secure each Rail to Inner Tube. This will form the two long sides of the platform.

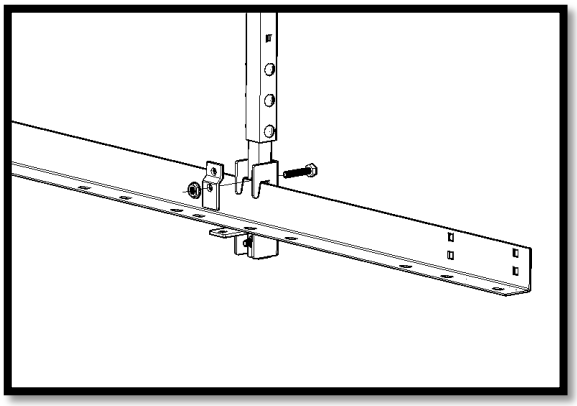

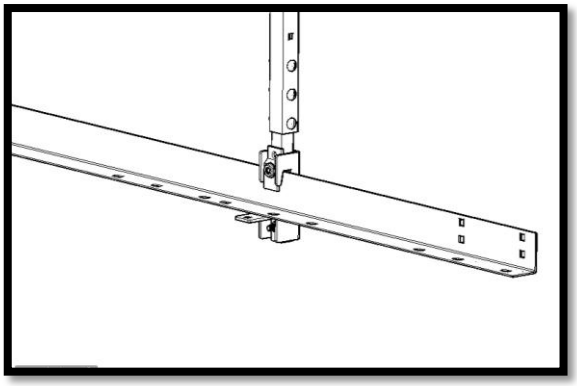

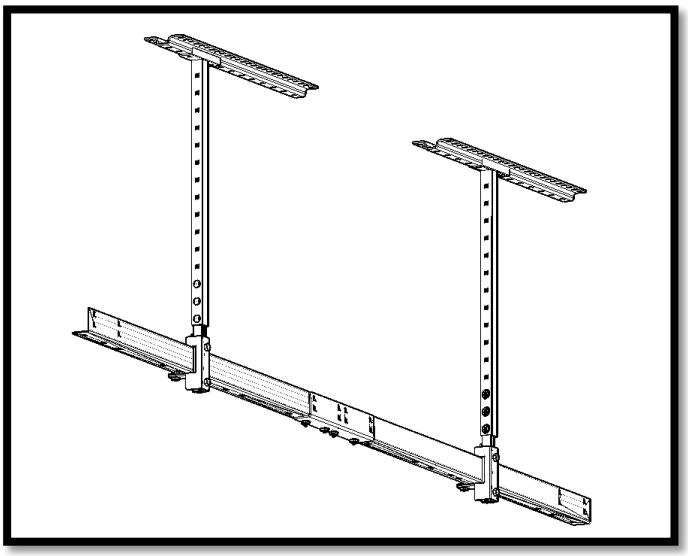

Ensure rail is even and tightly secure.

Hardware Required:

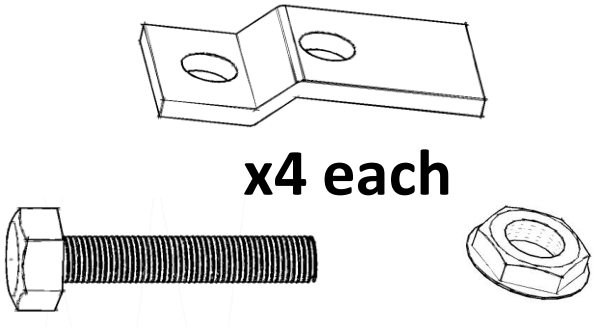

8

Continued

The second rail clamp attaches to the front using one small bolt and one large nut.

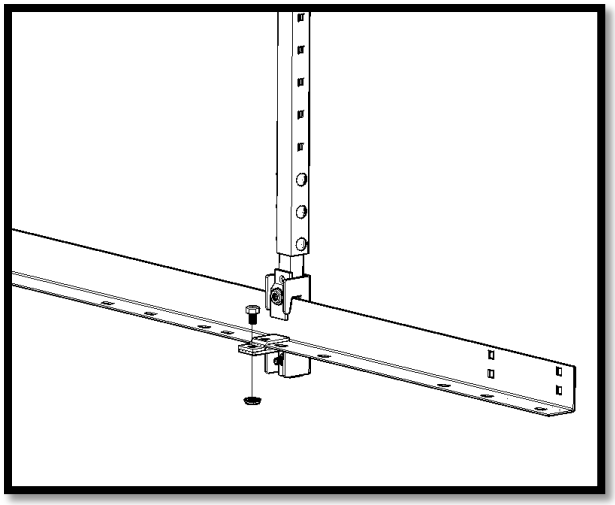

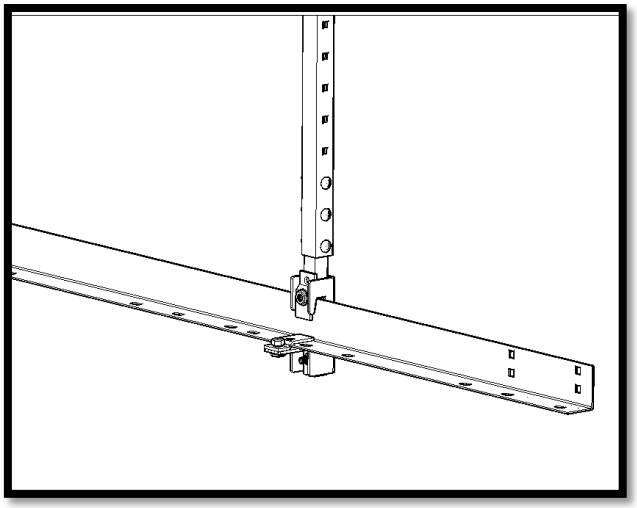

Ensure rail is even and tightly secure.

Hardware Required:

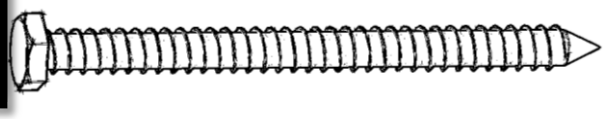

x2

9

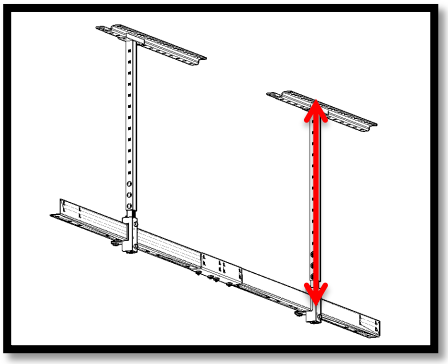

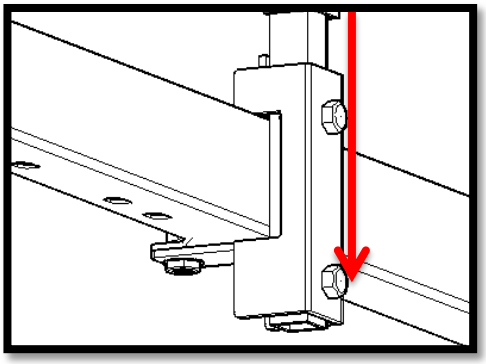

Using this assembled side: measure from the **ceiling** to the **center** of the bolt head on the rail clamp.

Locate the wall studs most in line with each of the down tubes installed. When each stud has been identified use the measurement from the ceiling to each stud. This will be the location of your pilot hole for each of the wall brackets.

Loosely secure bracket to wall and use a level on the side. When bracket is level, drill the top pilot hole.

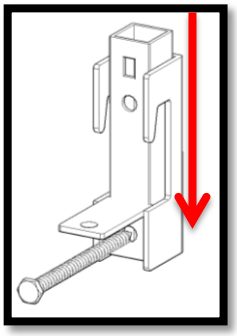

Do not put a lag screw in the top hole!

Hardware Required:

x2

10

Ensure the rail is even and aligned with the suspended rail (on opposite side). Place the second assembled 8 foot rail on the wall spanning the two wall brackets. Ensuring the bracket is level secure each using one clamp and 4” lag screw through the top hole of the rail wall bracket.

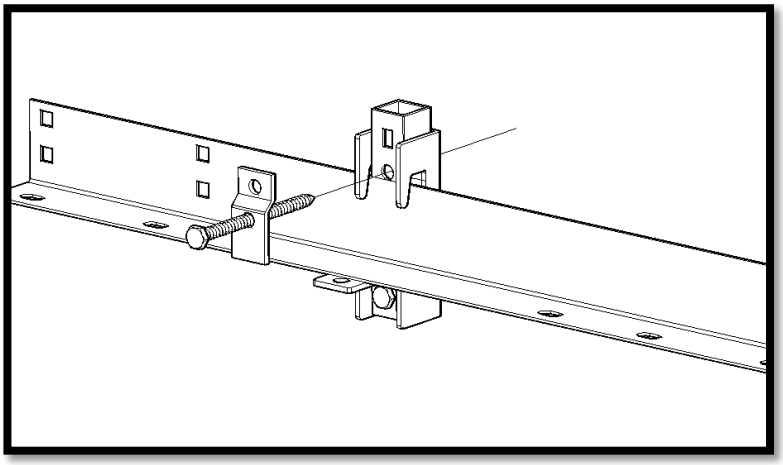

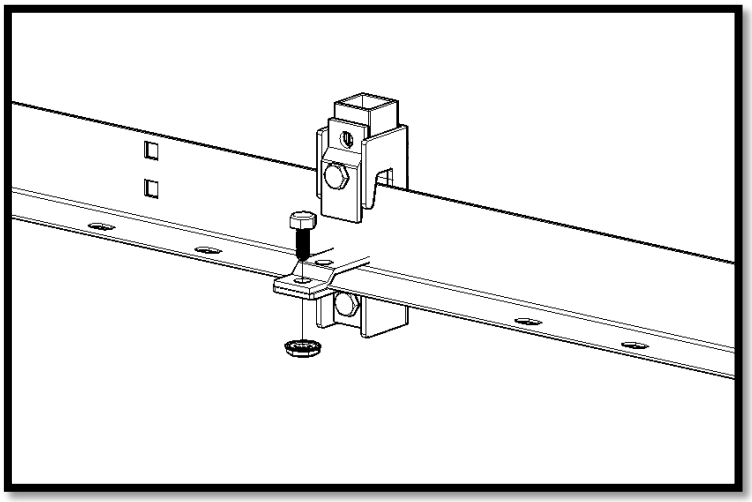

Tighten the bottom lag screw. Fully secure the rail using the rail clamp, small bolt, and large nut.

Hardware Required:

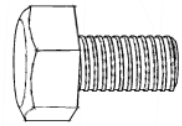

x4

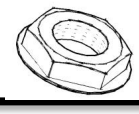

x4

11

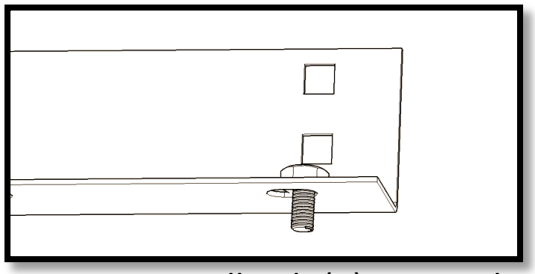

Drop one Small Bolt (C) into each end of both 8’ rails.

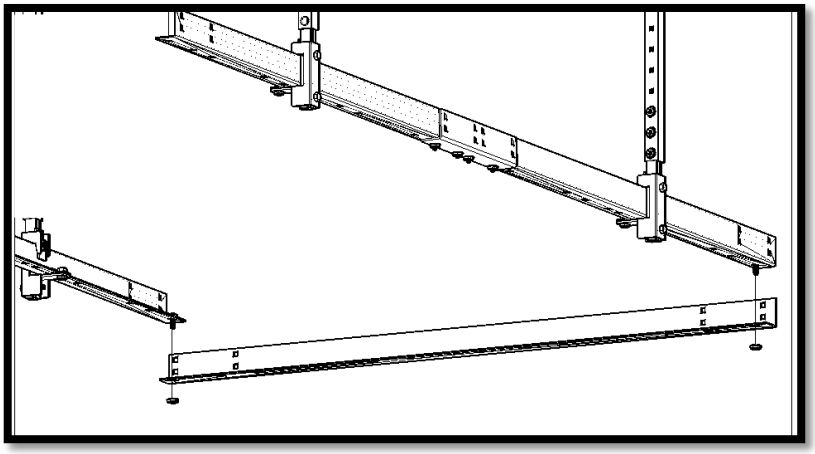

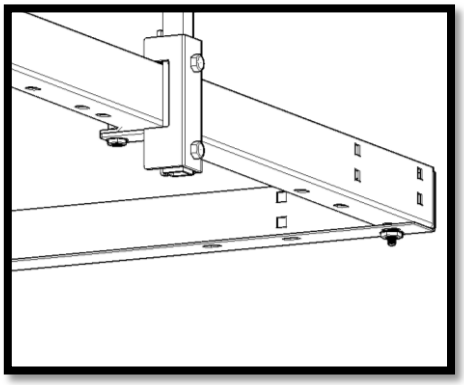

Use those four bolts to attach the four foot end rails. These rails need to be installed on the bottom side of the eight foot rails, secure with one large nut for each medium bolt.

Hardware Required:

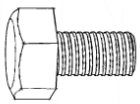
x16


x16

12

Lay one Steel Grid along the 4' rail at one end of the frame. Steel Grids must have the welded stiffeners on the bottom of the grids (as shown in the picture below) to provide additional strength and support. Each Steel Grid can be rotated to ensure holes align properly. Use four Small Bolts and two Large Nuts to secure each grid. Repeat with next grid, working your way toward the other end until all four grids are in place. The stiffener positions will alternate as the grids are installed.

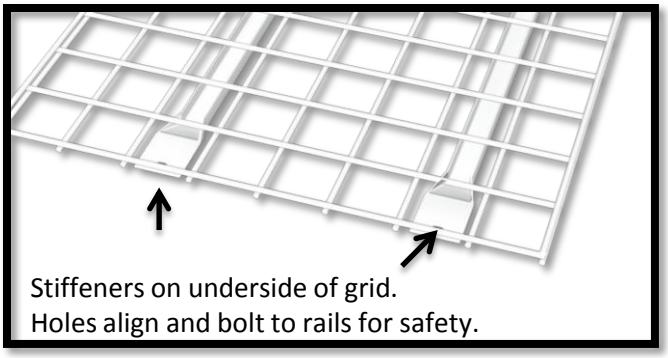

Note: Do not install grids with stiffeners on top of the grid.

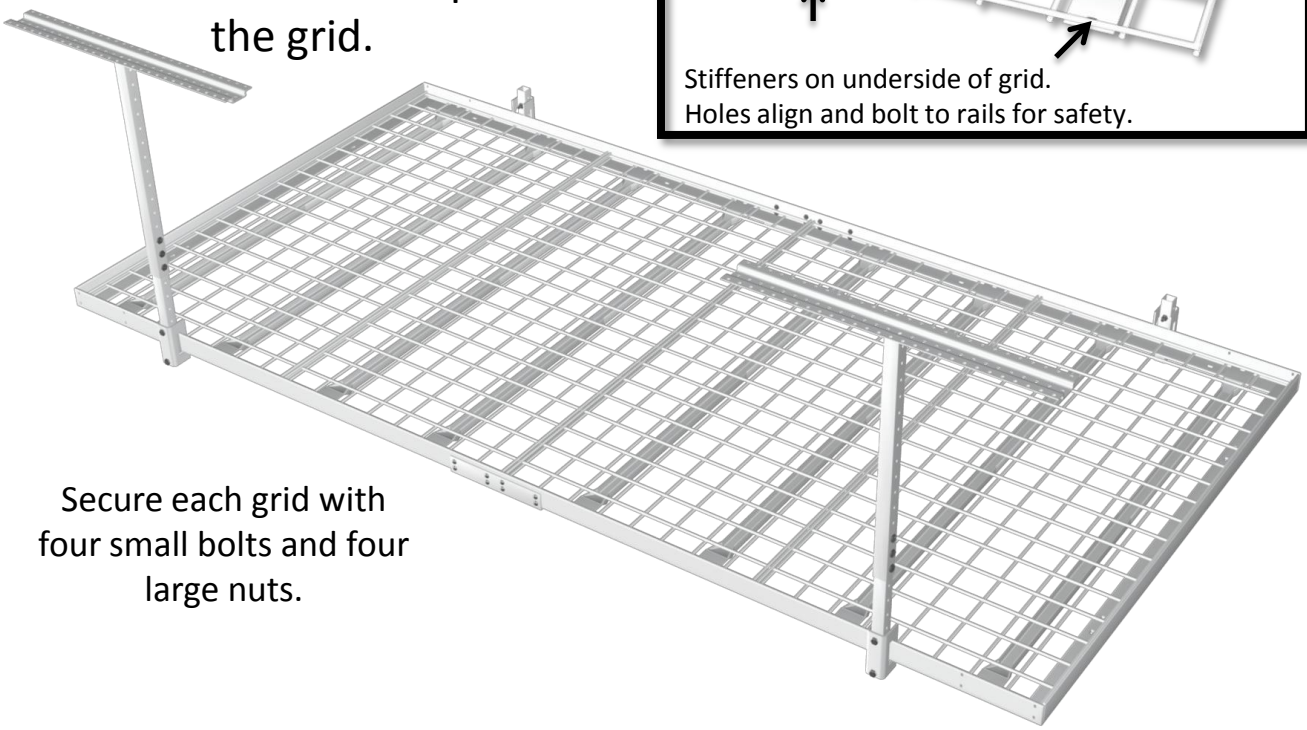

Secure each grid with four small bolts and four large nuts.

Note: if you are having a hard time aligning and installing grids your perimeter may not be perfectly square. Loosen clamps and adjust if necessary.

13

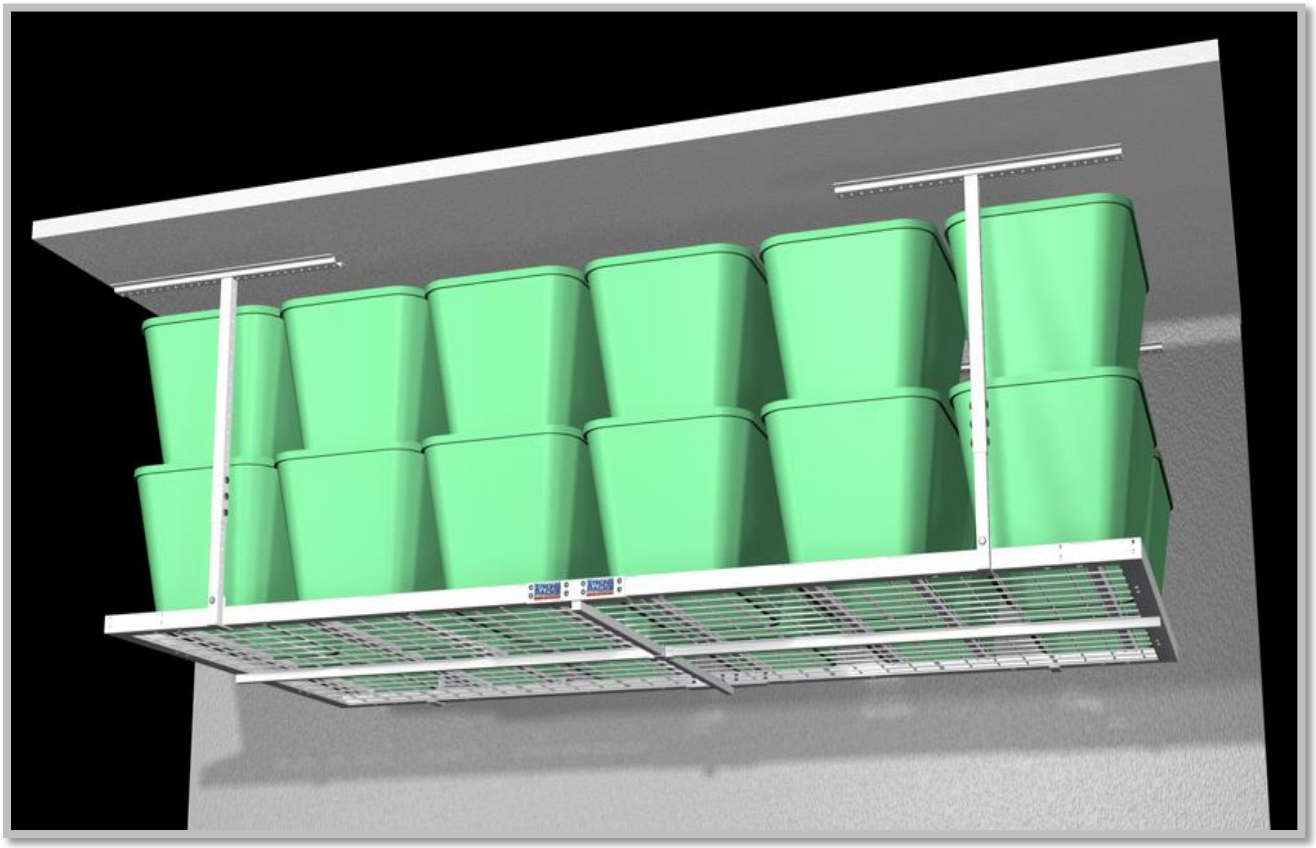

Congratulations! Stand back and admire your completed Strong Rack.

Now you can load your system. Refer to Appendix V for additional accessory options.

Appendix I –
Understanding Your Ceiling Support Systems

There are 4 standard type of roof structures:

1. Living Space above the garage area. 2. Flat roofs.
3. “Hip” / Truss roofs. 4. Traditional “Gable” roofs.

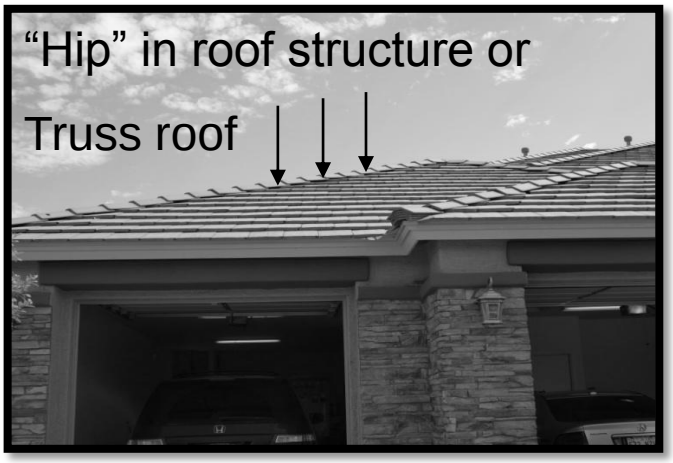

It is important to identify the type of roof structure you have, to start the process of installation. Once you identify the type of roof structure you have, you can understand the type of construction your have in your ceiling.

We will attempt to demonstrate the type of ceiling or truss systems but these types may vary. If you have any questions on the type of roof structure you have, we recommend contacting your builder, viewing your ceiling trusses via your attic access or contacting a qualified representative to help you.

Appendix II – Storage Locator Worksheet

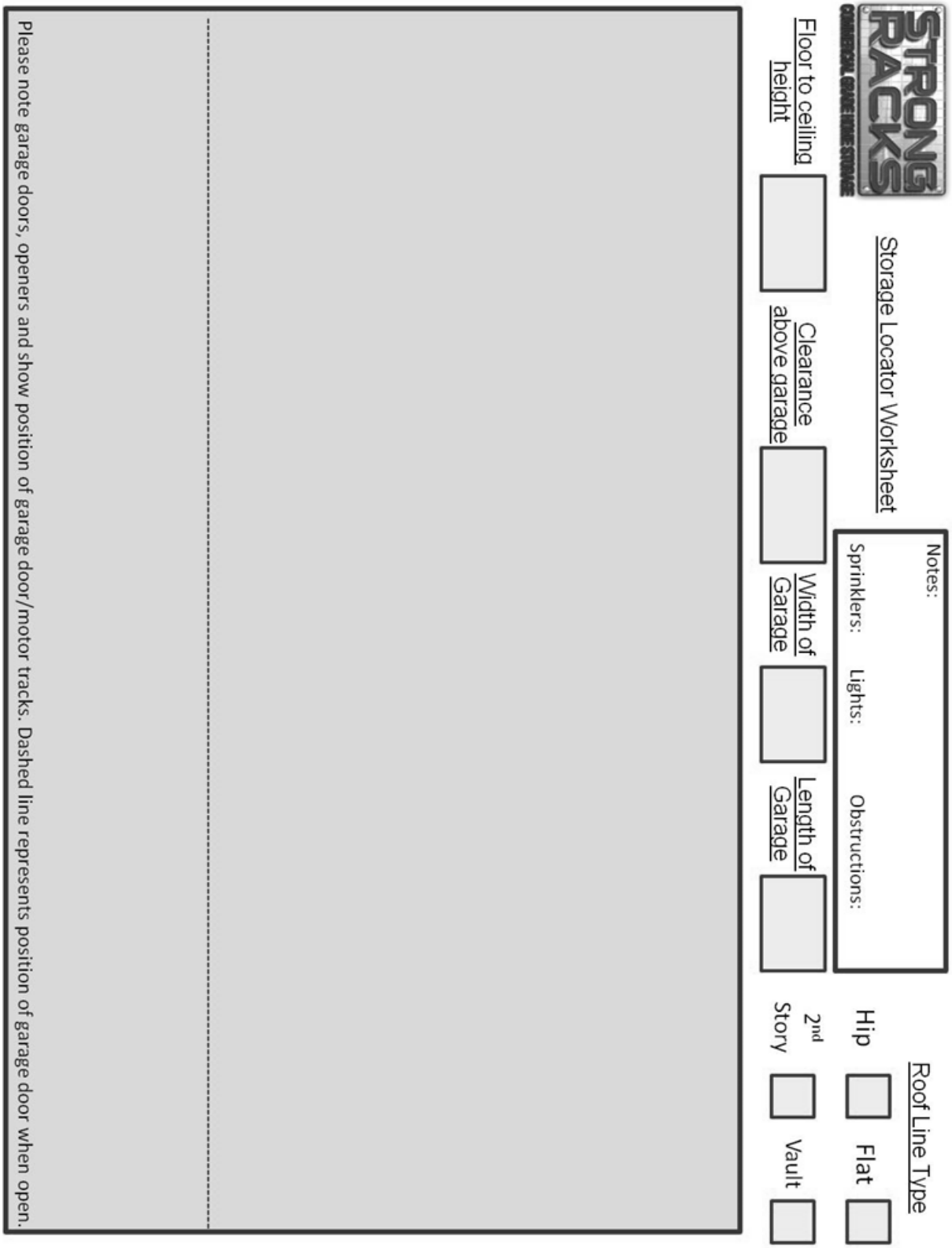

Appendix III – Proper Mounting

- It is recommended to use a stud finder and physically inspect your crawl space to locate your truss direction. You can also make note of any electrical, plumbing or gas lines that may be around your truss system.
- Always install the lag screws directly into the center of a truss. With appropriate installation, you should never encounter utility lines.
- We recommend probing to find the edges of your truss. This is the most reliable method of finding the center of your truss and ensures proper installation of the lag screws.
- Because our lag screws are designed to be contained inside of solid wood trusses, they are 3” in length. If you find that you have pre-fabricated wood trusses such as TGI’s, we recommend that you slowly tighten your lag screws into the mounting track. Some pre-fabricated trusses are thin, and your lag screws may penetrate the back side.
- If you cannot view your trusses due to a living space being above your garage, you can purchase 2 ½” steel lag screws to replace the 3” lag screws that are provided in your hardware kit.
- In every situation, it is best to consult with your builder or a professional to help with your project.

Appendix IV – Need Installation Help?

Visit www.strongracks.com to locate your nearest installer or watch our detailed installation video. Some homeowners prefer to stream this video in their garage while installing our products.

While our installation videos provide a high level of detail, you must still thoroughly read through this installation guide prior to starting your project.

Appendix V – Accessory Options

Bike Adapter

18” x 36” Steel Wall Shelf

Wood Shelf Liner

Ladder Hanger

All Purpose/Bike Hook